Warmup 3/$\left(1 \div \frac{22 \cdot 0+1}{22}\right)$

Created by Jonathan Hanks

1) Find the area of the shaded region:

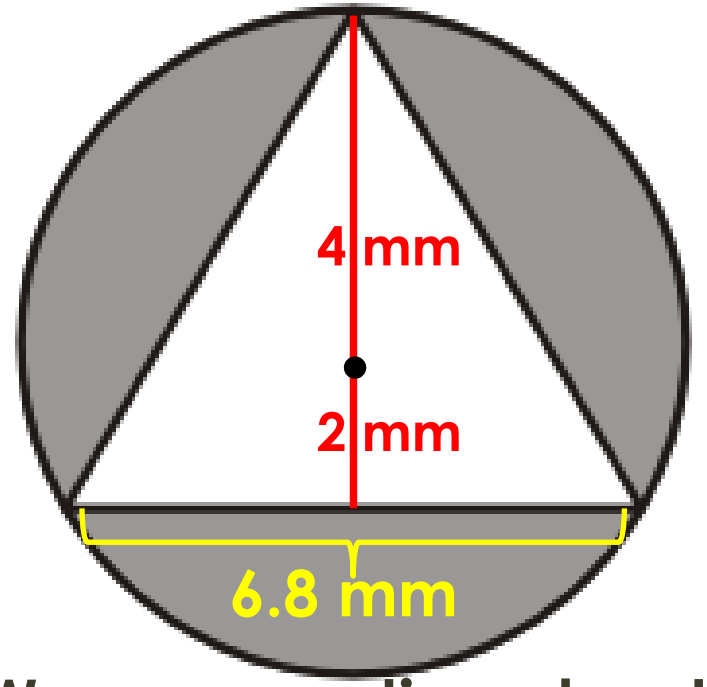

Area = Circle – Triangle

Area = $\pi \cdot 4^2 - \frac{1}{2} \cdot 6.8 \cdot 6$

Area $\approx 50.3 - 20.4$

Area $\approx 29.9mm^2$

(Warmup continued on the next page)

2) Find the volume of the prism:

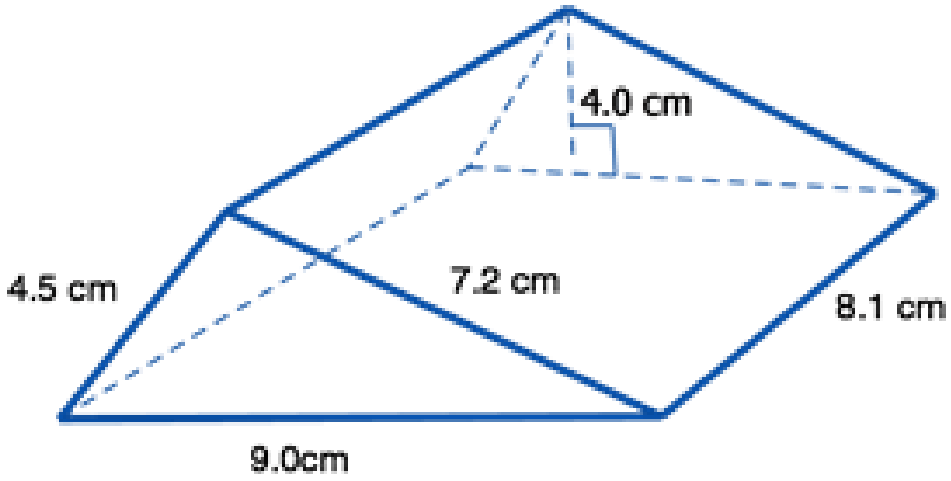

$$V = \left(\frac{b \cdot h}{2}\right) h$$

$$V = \left(\frac{9 \cdot 4}{2}\right) 8.1$$

$$V = (18) \cdot 8.1$$

$$\boldsymbol{V = 145.8\ cm^3}$$

Go over Prisms WS

Get out your popcorn cylinder sheets…

Ejaz & Rachel	624
Maddy & Emily	3822
Ellie & Cooper	966
Lillian & Nalia	920
Hannah Kate & Jadyn	608
Ella Clare & Olivia	760
Noel & Tristan	162
Hannah & Kiley	765
Irsema & Vivian	616

Gretchen & Carey Ann	2957
Kori & Addison	132
Natalie & Kiana	350
Dylan & Jalen	733
Lilli & Donovan	646
Abby & Liam	230
Lauren & Sameer	251
Ethan & Anthony	138
Tripavanh & Landy	5848
Virginia & Emma	4692

Alade & Daniel	926
Graham & Cayla	800
Preston & Ashlyn	368
Sarah & Marshawn	262
Deedrick & Hana	756
Reese & Ian	735
Rachel & Autumn	133
GiGi, Aeriella, & Emma	840
Jasmyn & Jayden	1106
Jonathan & Edvin	1272

Max & Rosalee	560
Brynn & Shania	861
Kaylynn & Martha	176
Melanie & Mikayla	680
Lilli & Macy	186
Zander	5334
Ayo & Avin	1034
Antione & Josh	836

AND THE ANSWER IS…

1089

kernels

Closet Estimates…

1) Jasmyn & Jayden – 1109 17 away
2) Ayo & Avin – 1034 55 away
3) Ellie & Cooper – 966 123 away
4) Alade & Daniel – 926 163 away
5) Lillian & Nalia – 920 169 away
6) Jonathan & Edvin – 1272 183 away

Strategies we used???

- **The strategy I was hoping you would use:**
- Figure out how many kernels are in 1 "layer"
- Think of the cylinder as layers of these circles stacked on top of each other
- Multiply the # of kernels in 1 layer by how many "layers" there would be

- **WHY WERE OUR ESTIMATES TOO LOW???**
- There are gaps in between the popcorn kernels, which causes the kernels to "settle" more. Most people don't think to account for this.

Table of Contents (2nd Semester)

A cylinder is a prism…

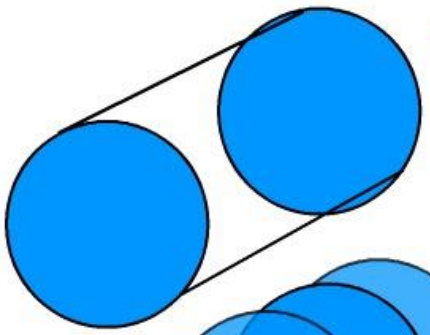

Note 1: A cylinder is a prism

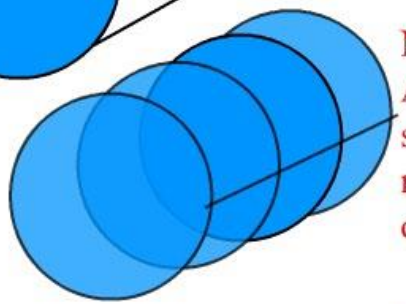

Note 2: The Volume of ANY prism is its base shaped stacked on itself repeatedly to the height of the prism.

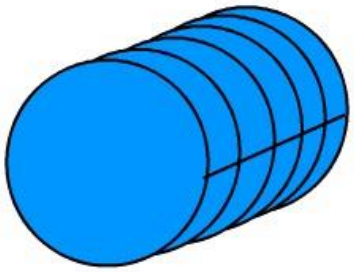

Volume of a Cylinder

$$V = \pi r^2 \cdot h$$

- r = radius of the base
- h = height of cylinder

- Find the volume. Round to the nearest tenth.

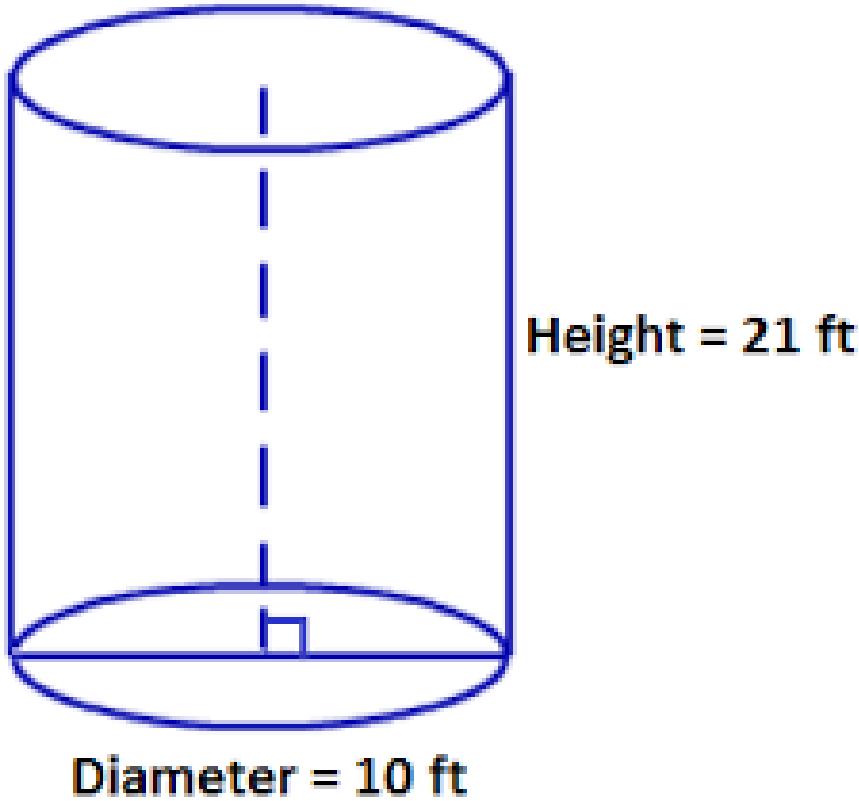

$$V = \pi r^2 \cdot h$$

$$V = \pi \cdot 5^2 \cdot 21$$

$$V \approx 1649.3\ ft^3$$

Popcorn Challenge: Part 2

- Goal: Figure out how many kernels of popcorn would fit in the cone.
- The cone and cylinder have the same height and the same radius. I will pass around the cylinder and the cone – you may look at it for a few seconds.
- You and your group need to **discuss** and come up with how many kernels of popcorn you think fit in the cone.

How many of the “cones” fill up the cylinder?

- Demonstration (need a volunteer)

AND THE ANSWER IS…

356

kernels

Table of Contents (2nd Semester)

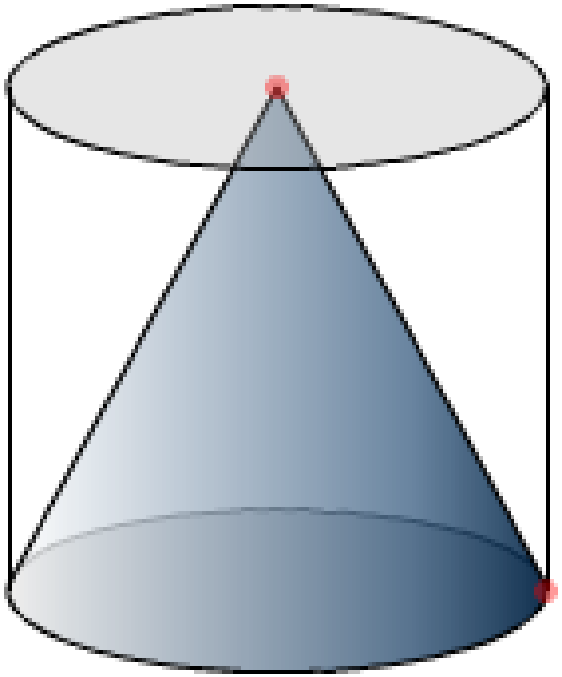

Volume of a Cone

$$V = \frac{\pi r^2 \cdot h}{3}$$

- Basically, 3 cones = 1 cylinder (if the radius & height is the same)

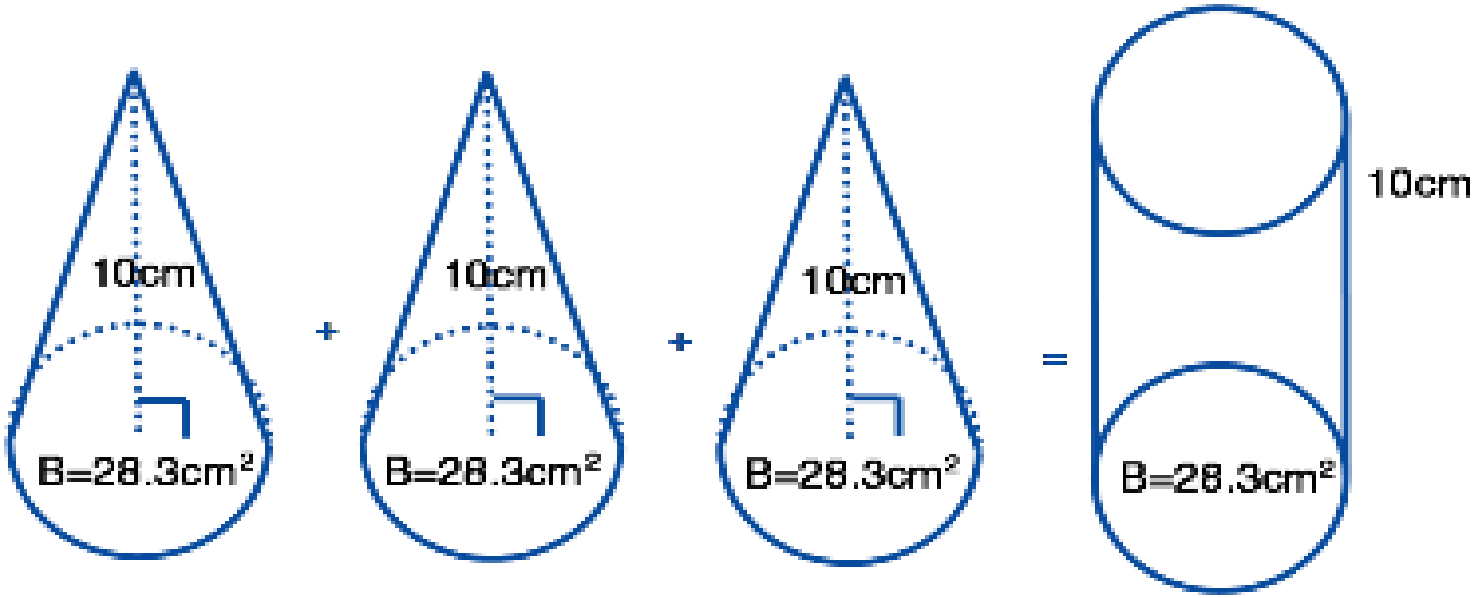
10cm
B=28.3cm²
+
10cm
B=28.3cm²
+
10cm
B=28.3cm²
=
10cm
B=28.3cm²

Example: Cone

- **Find the volume of the cone:**

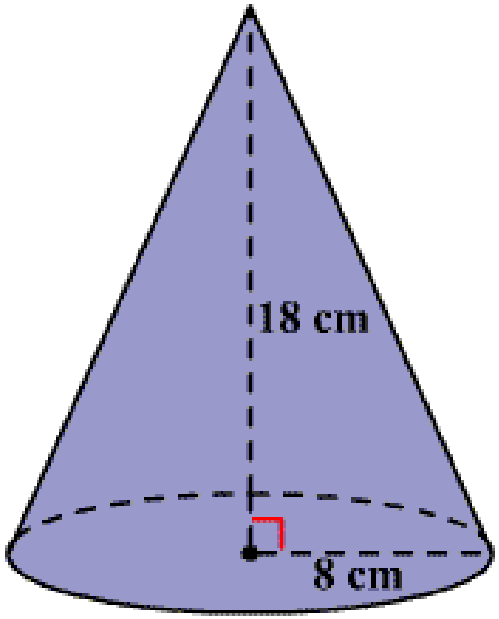

$$V = \frac{\pi r^2 h}{3}$$

$$V = \frac{\pi \cdot 8^2 \cdot 18}{3}$$

$$V \approx 1206.4\ cm^3$$